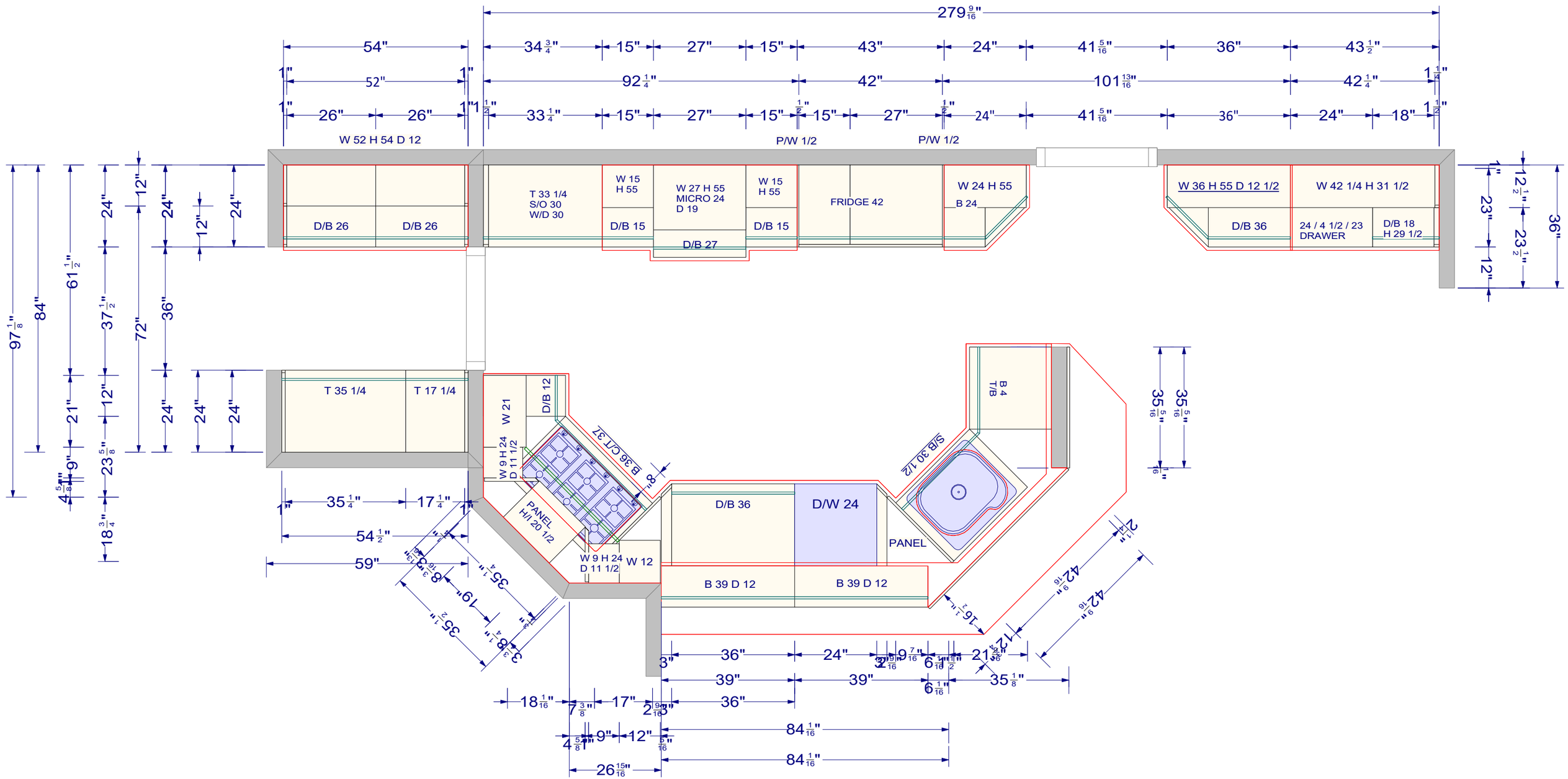
279 9/16"
54"
34 3/4"
15"
27"
15"
43"
24"
41 5/16"
36"
43 1/2"
52"
92 1/4"
42"
101 13/16"
42 1/4"
26"
26"
33 1/4"
15"
27"
15"
15"
27"
24"
41 5/16"
36"
24"
18"
W 52 H 54 D 12
P/W 1/2
P/W 1/2
D/B 26
D/B 26
T 33 1/4
S/O 30
W/D 30
W 15
H 55
D/B 15
W 27 H 55
MICRO 24
D 19
D/B 27
W 15
H 55
D/B 15
FRIDGE 42
W 24 H 55
B 24
W 36 H 55 D 12 1/2
D/B 36
W 42 1/4 H 31 1/2
24 / 4 1/2 / 23
DRAWER
D/B 18
H 29 1/2
T 35 1/4
T 17 1/4
W 21
D/B 12
W 9 H 24
D 11 1/2
B 36 C/T 31
PANEL
H/I 20 1/2
W 9 H 24
D 11 1/2
W 12
D/B 36
D/W 24
PANEL
B 39 D 12
B 39 D 12
S/B 30 1/2
B 4
T/B
35 1/4"
17 1/4"
54 1/2"
59"
36"
24"
39"
39"
35 1/8"
18 1/16"
17"
36"
84 1/16"
84 1/16"
26 15/16"

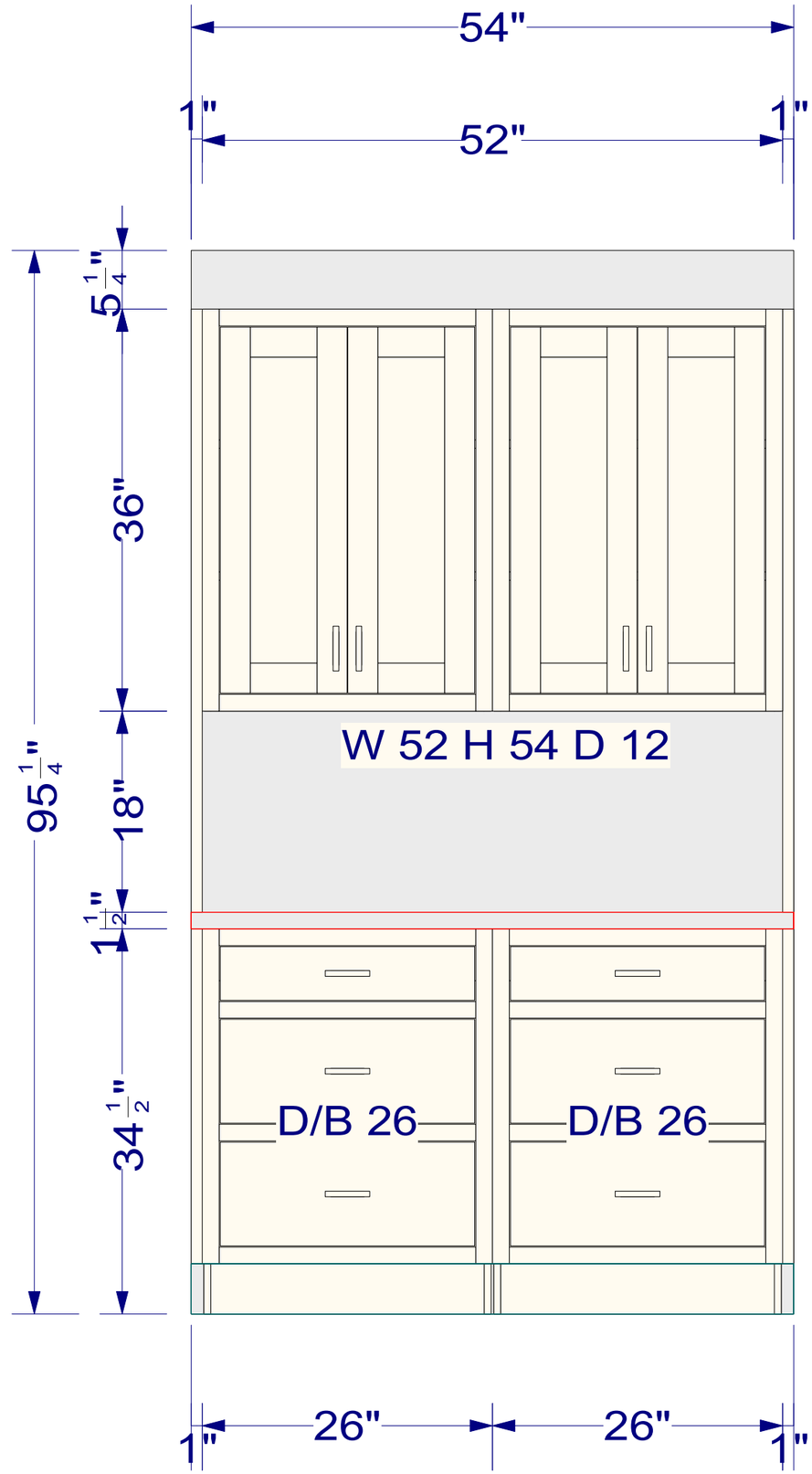
54"
1"
52"
1"
5 1/4"
36"
95 1/4"
18"
1 1/2"
34 1/2"
W 52 H 54 D 12
D/B 26
D/B 26
1"
26"
26"
1"

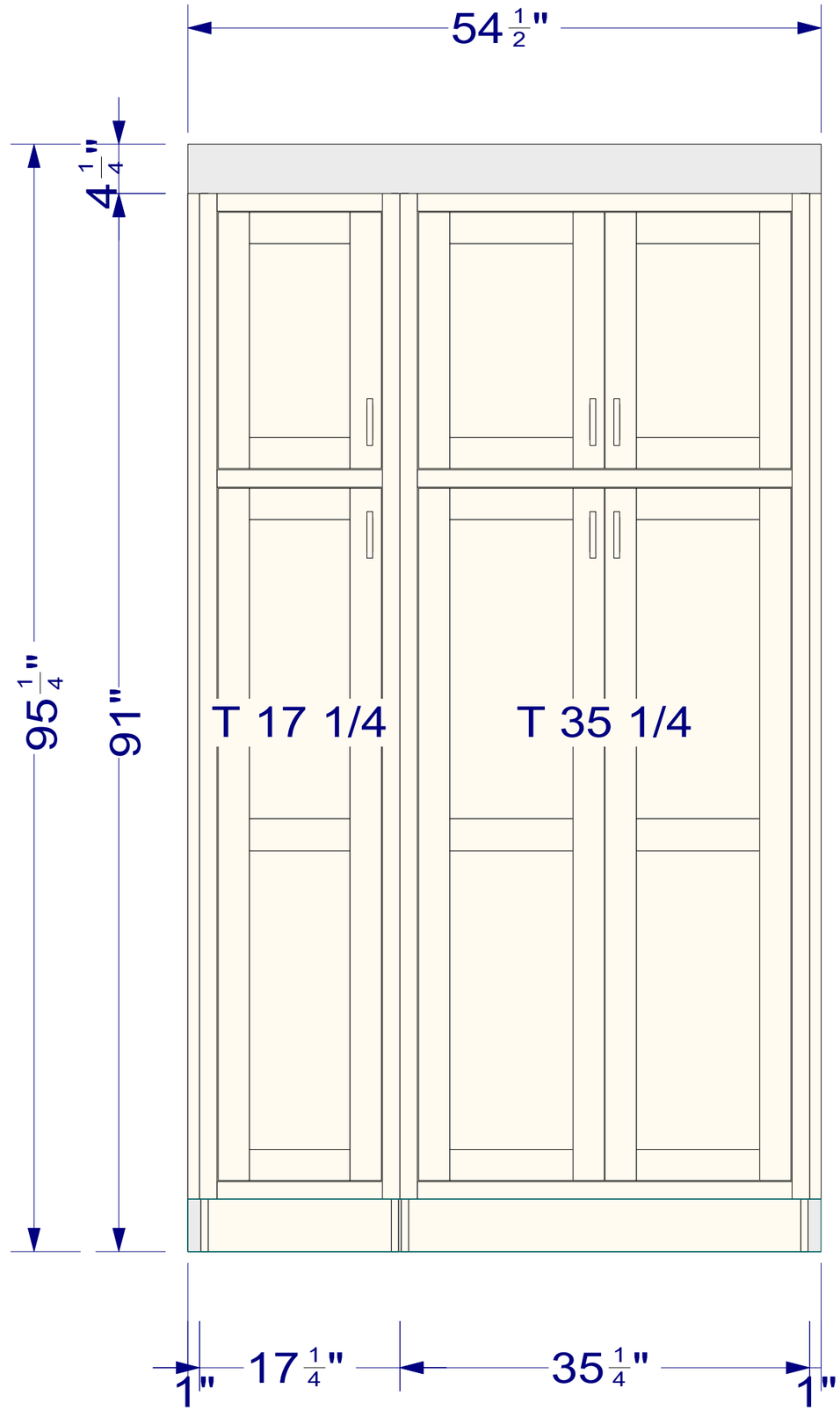
54 1/2"
4 1/4"
95 1/4"
91"
T 17 1/4
T 35 1/4
1"
17 1/4"
35 1/4"
1"

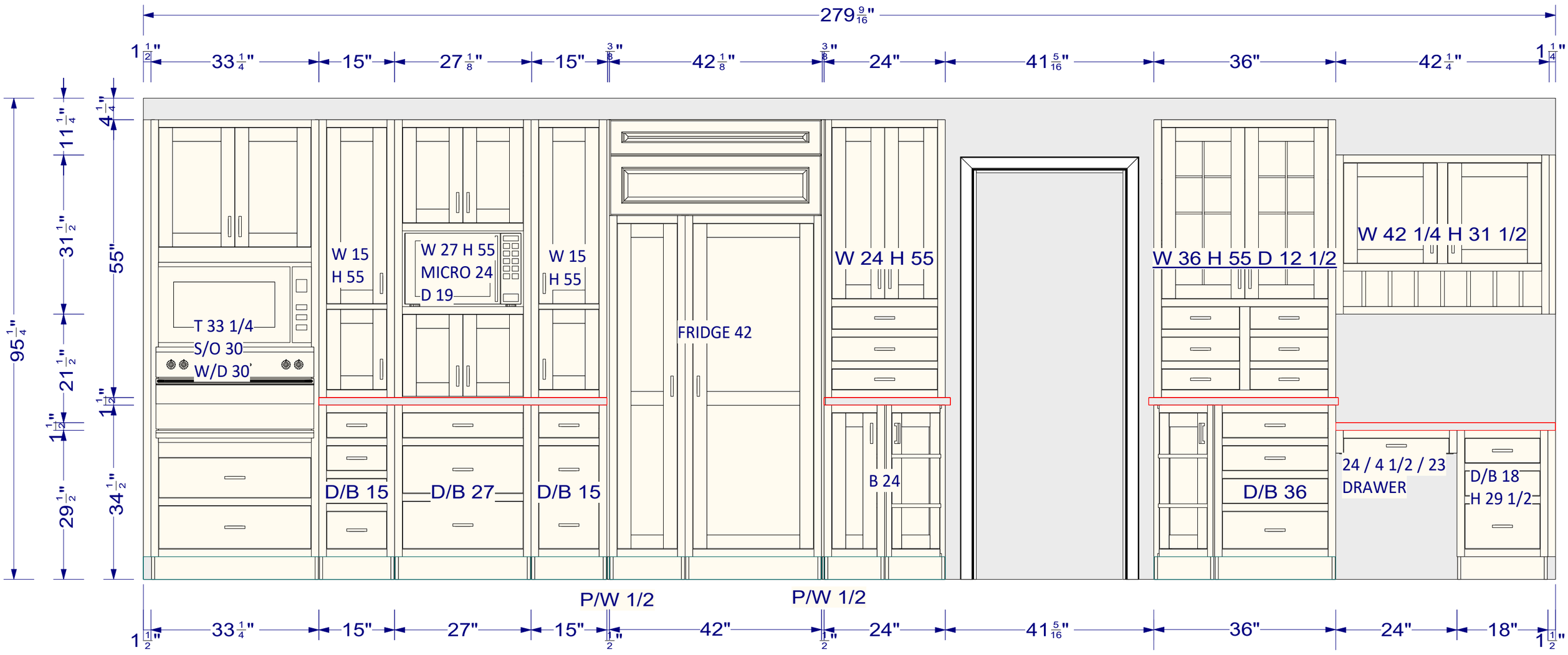
279 9/16"
1 1/2"
33 1/4"
15"
27 1/8"
15"
3/8"
42 1/8"
3/8"
24"
41 5/16"
36"
42 1/4"
1 1/4"
95 1/4"
11 1/4"
31 1/2"
21 1/2"
1 1/2"
29 1/2"
4 1/4"
55"
1 1/2"
34 1/2"
T 33 1/4
S/O 30
W/D 30
W 15
H 55
W 27 H 55
MICRO 24
D 19
W 15
H 55
FRIDGE 42
W 24 H 55
W 36 H 55 D 12 1/2
W 42 1/4 H 31 1/2
D/B 15
D/B 27
D/B 15
B 24
D/B 36
24 / 4 1/2 / 23
DRAWER
D/B 18
H 29 1/2
P/W 1/2
P/W 1/2
1 1/2"
33 1/4"
15"
27"
15"
1/2"
42"
1/2"
24"
41 5/16"
36"
24"
18"
1 1/2"

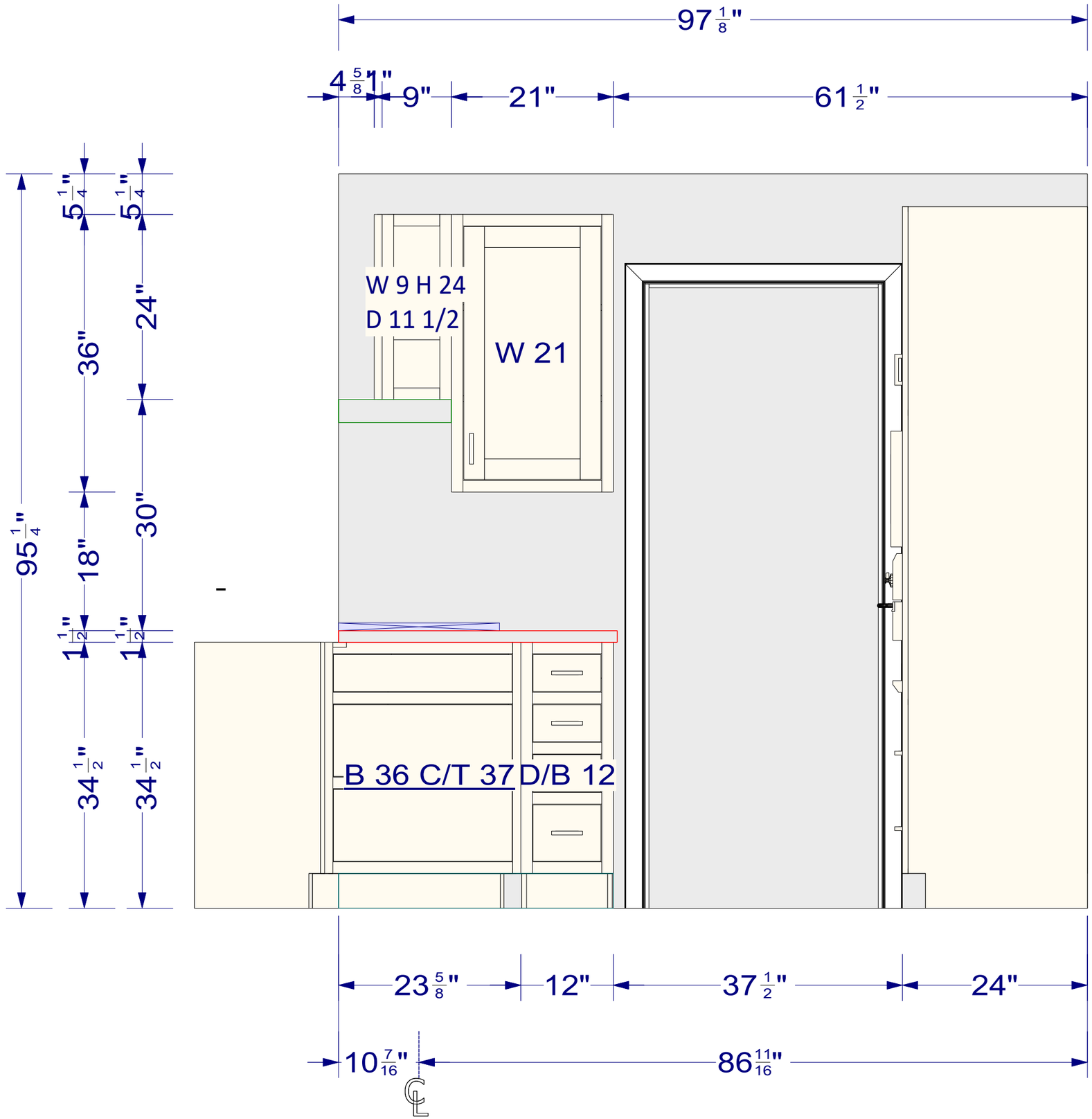
97 1/8"
4 5/8"
1"
9"
21"
61 1/2"
5 1/4"
5 1/4"
36"
24"
95 1/4"
18"
30"
1 1/2"
1 1/2"
34 1/2"
34 1/2"
W 9 H 24
D 11 1/2
W 21
B 36 C/T 37 D/B 12
23 5/8"
12"
37 1/2"
24"
10 7/16"
86 11/16"

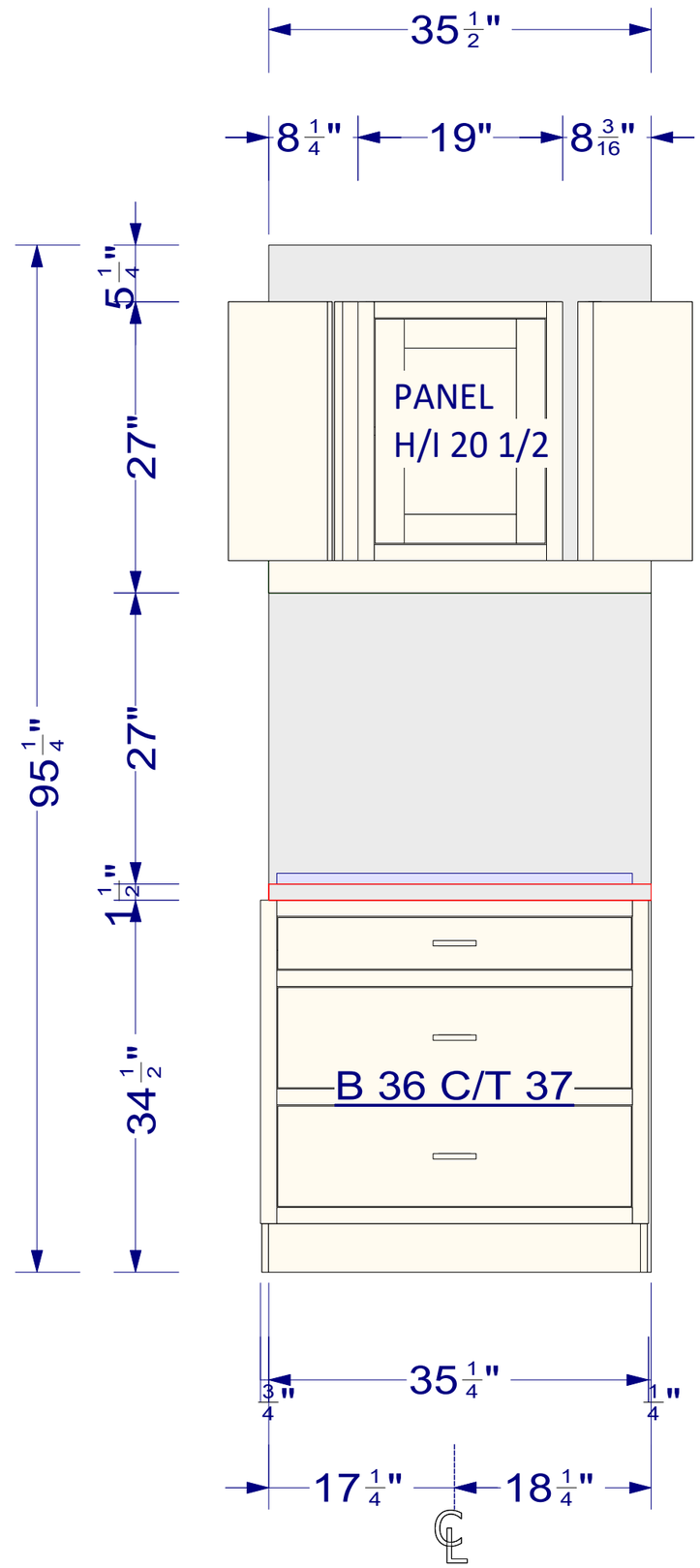
35 1/2"
8 1/4"
19"
8 3/16"
5 1/4"
27"
27"
95 1/4"
1 1/2"
34 1/2"
PANEL
H/I 20 1/2
B 36 C/T 37
3/4"
35 1/4"
1/4"
17 1/4"
18 1/4"
℄

-

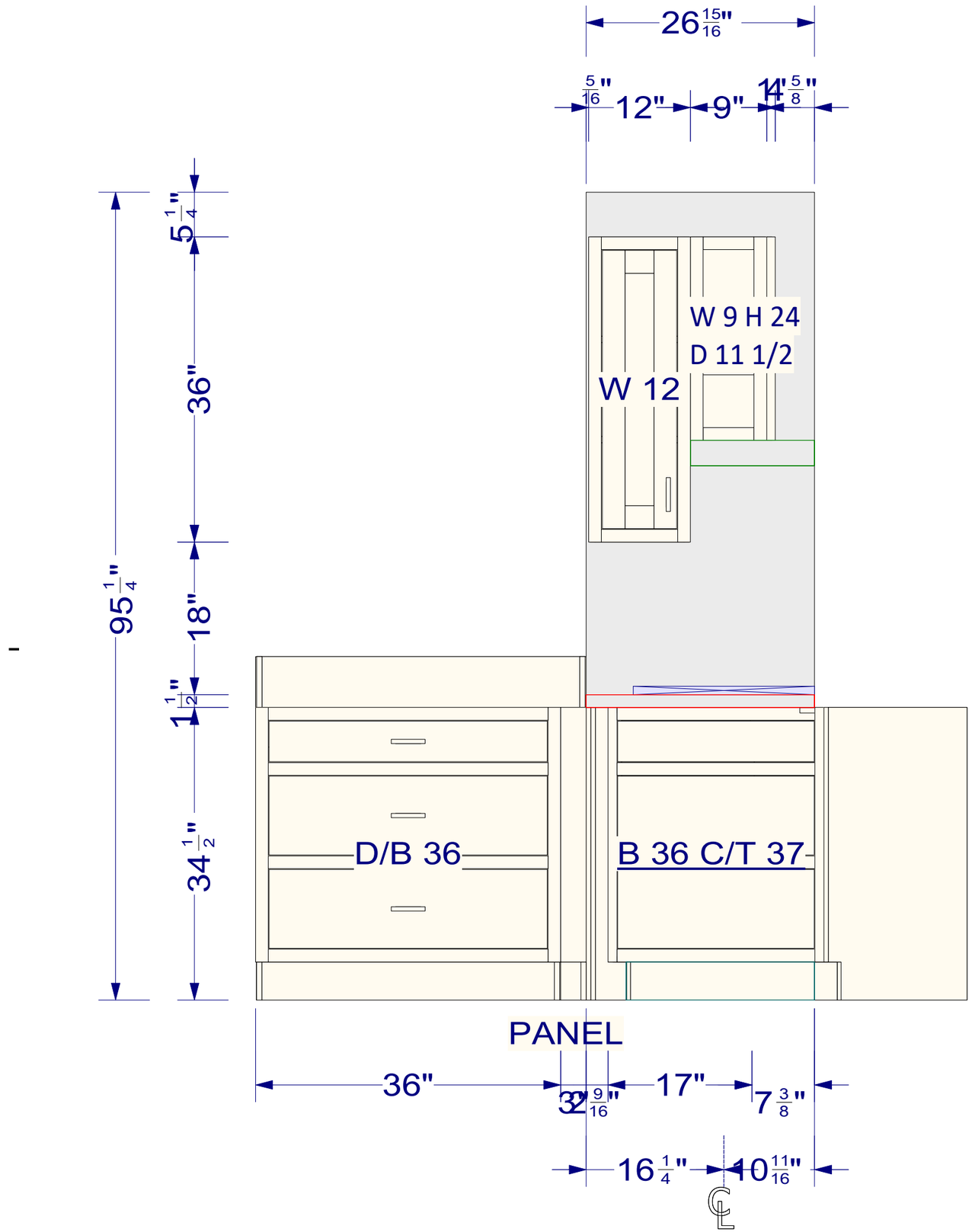
26 15/16"
5/16"
12"
9"
14"
5/8"
5 1/4"
36"
95 1/4"
18"
1 1/2"
34 1/2"
W 9 H 24
D 11 1/2
W 12
D/B 36
B 36 C/T 37
PANEL
36"
32 9/16"
17"
7 3/8"
16 1/4"
10 11/16"

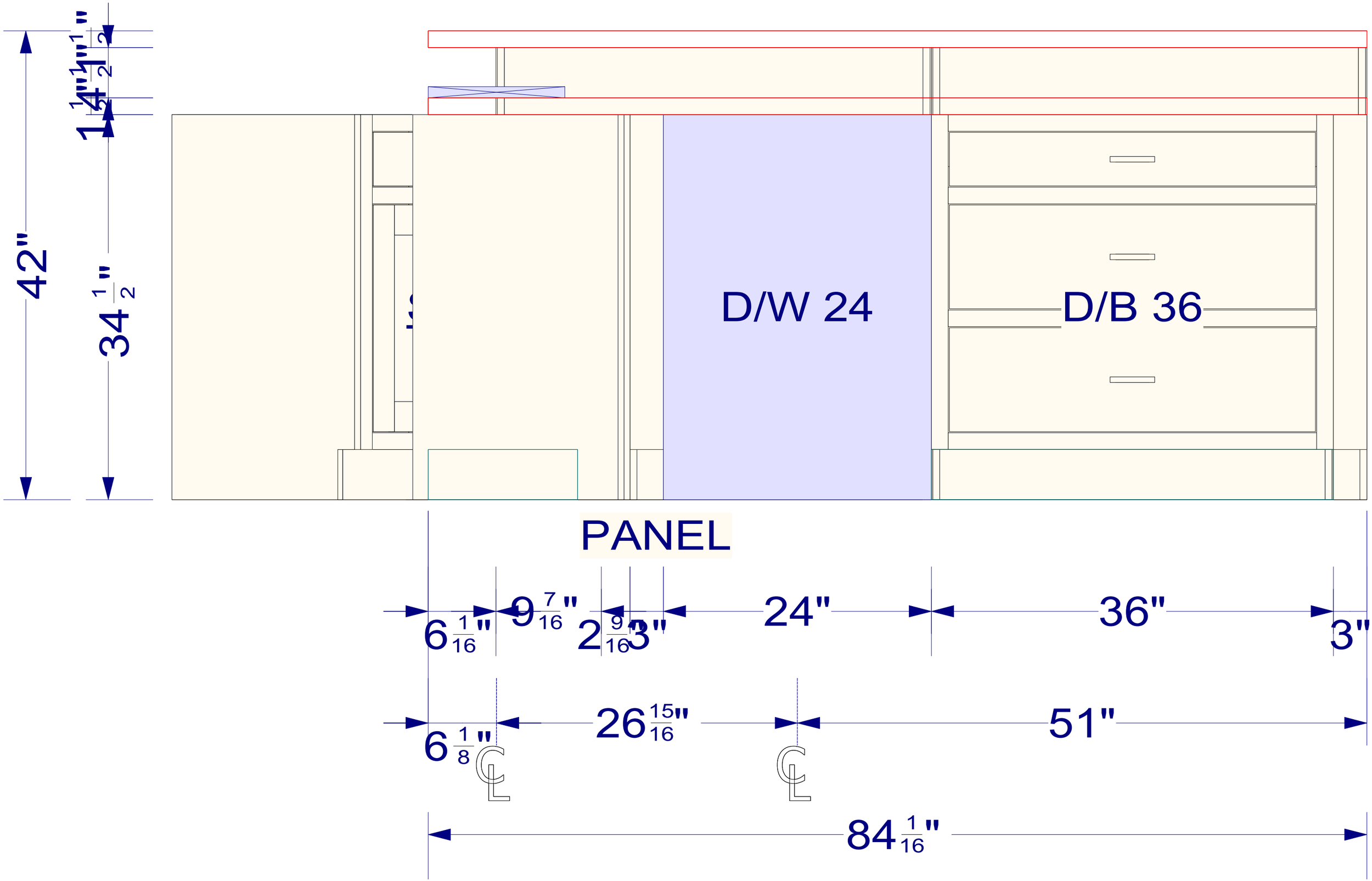
42"
34 1/2"
1 1/2"
1 1/2"
1 1/2"
D/W 24
D/B 36
PANEL
6 1/16"
9 7/16"
2 9/16"
3"
24"
36"
3"
6 1/8"
26 15/16"
51"
84 1/16"

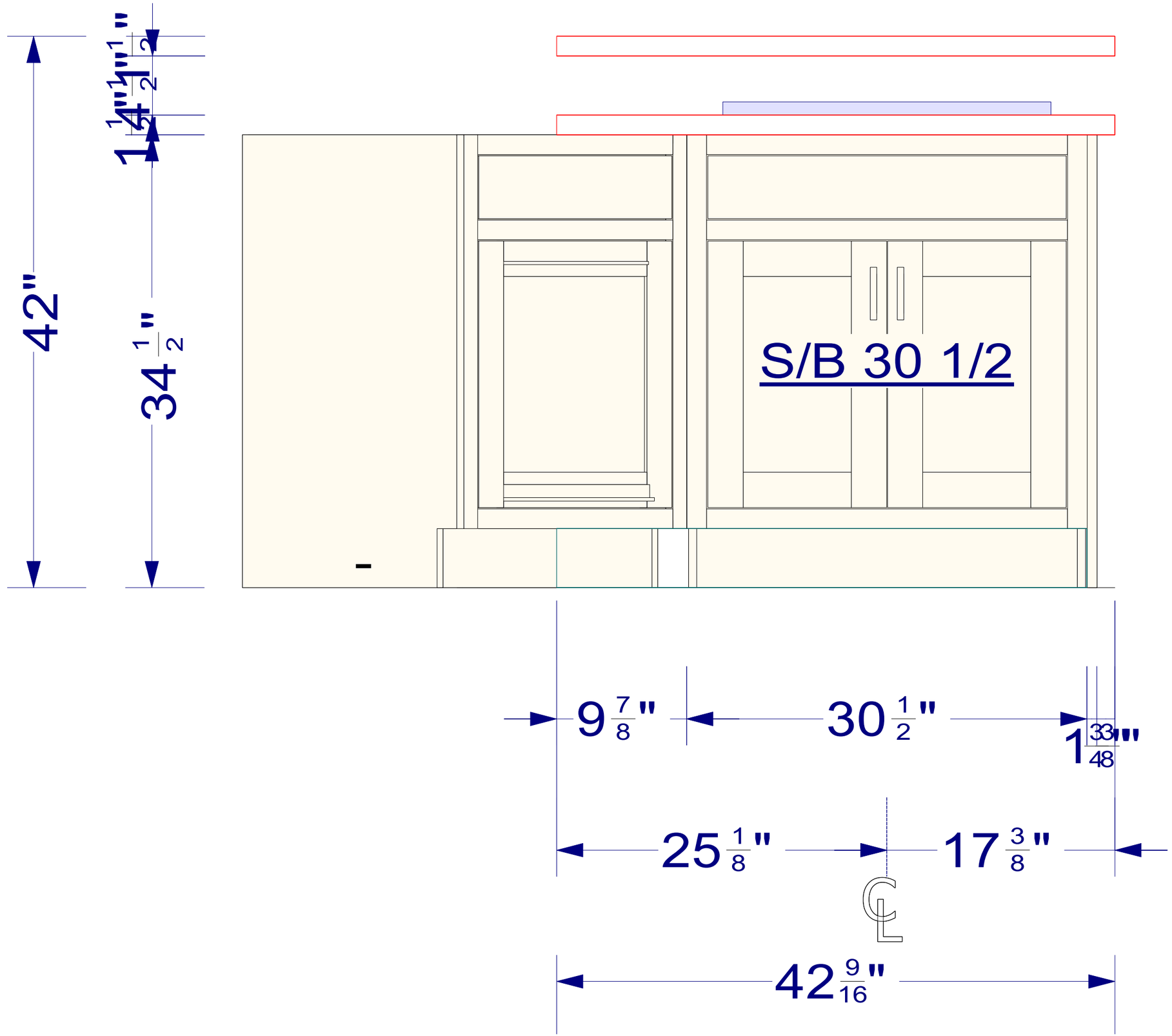
42"
34 1/2"
1 1/4"
1 1/2"
1/2"
S/B 30 1/2
9 7/8"
30 1/2"
1 33/48"
25 1/8"
17 3/8"
42 9/16"

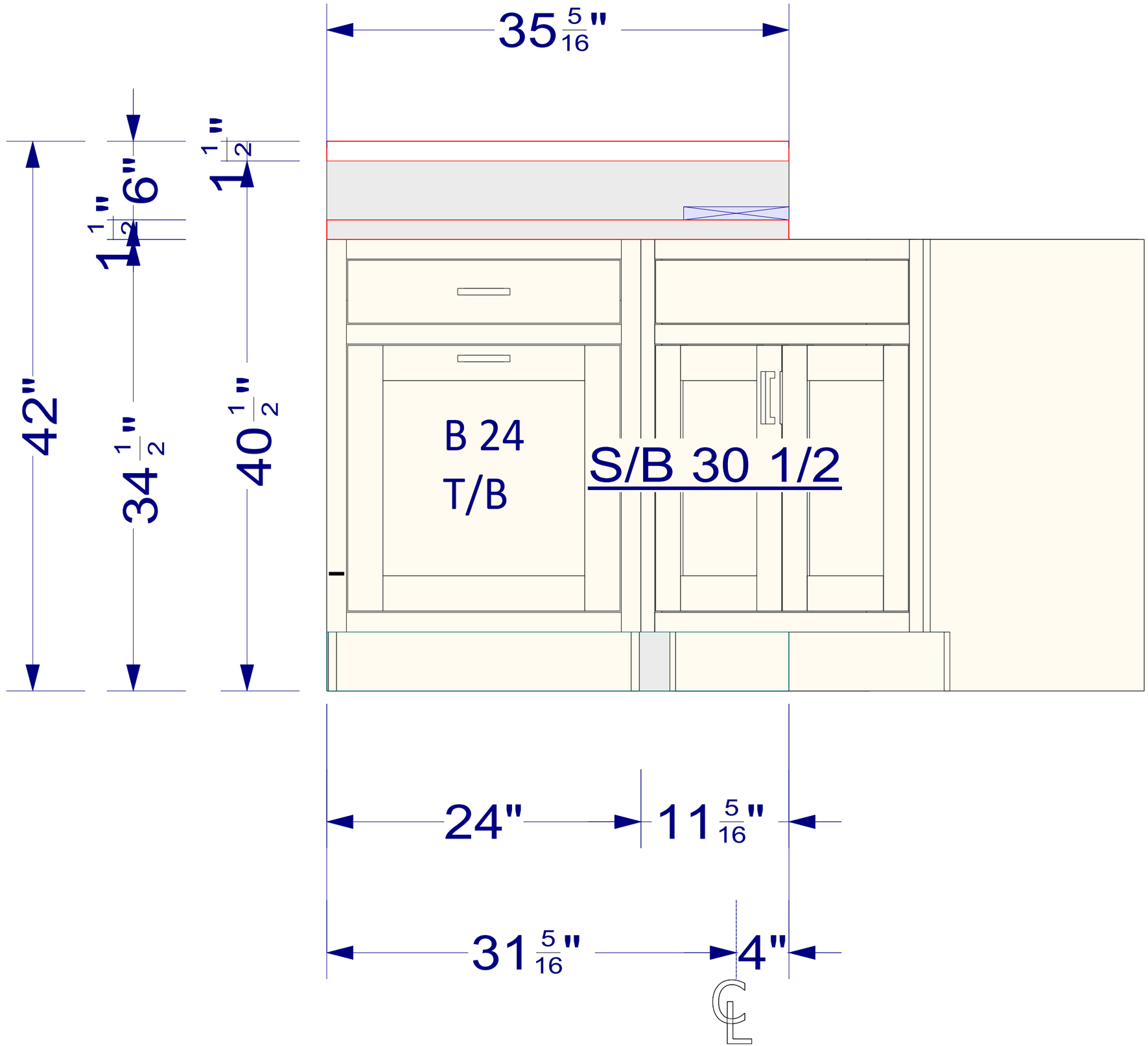
35 5/16"
1 1/2"
6"
1 1/2"
42"
34 1/2"
40 1/2"
B 24
T/B
S/B 30 1/2
24"
11 5/16"
31 5/16"
4"
℄

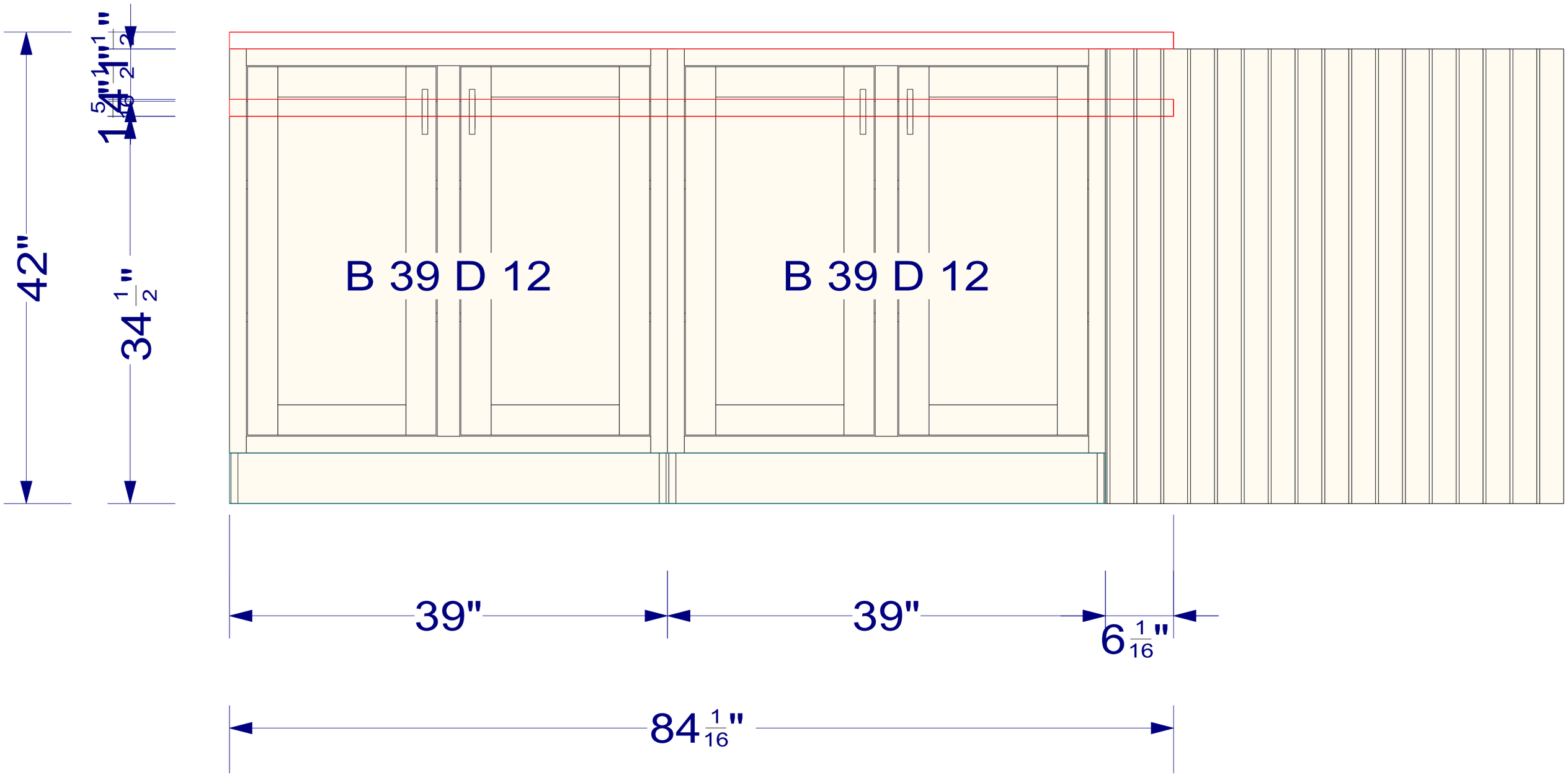
42"
34 1/2"
1 1/2"
1 1/2"
1 5/8"
B 39 D 12
B 39 D 12
39"
39"
6 1/16"
84 1/16"

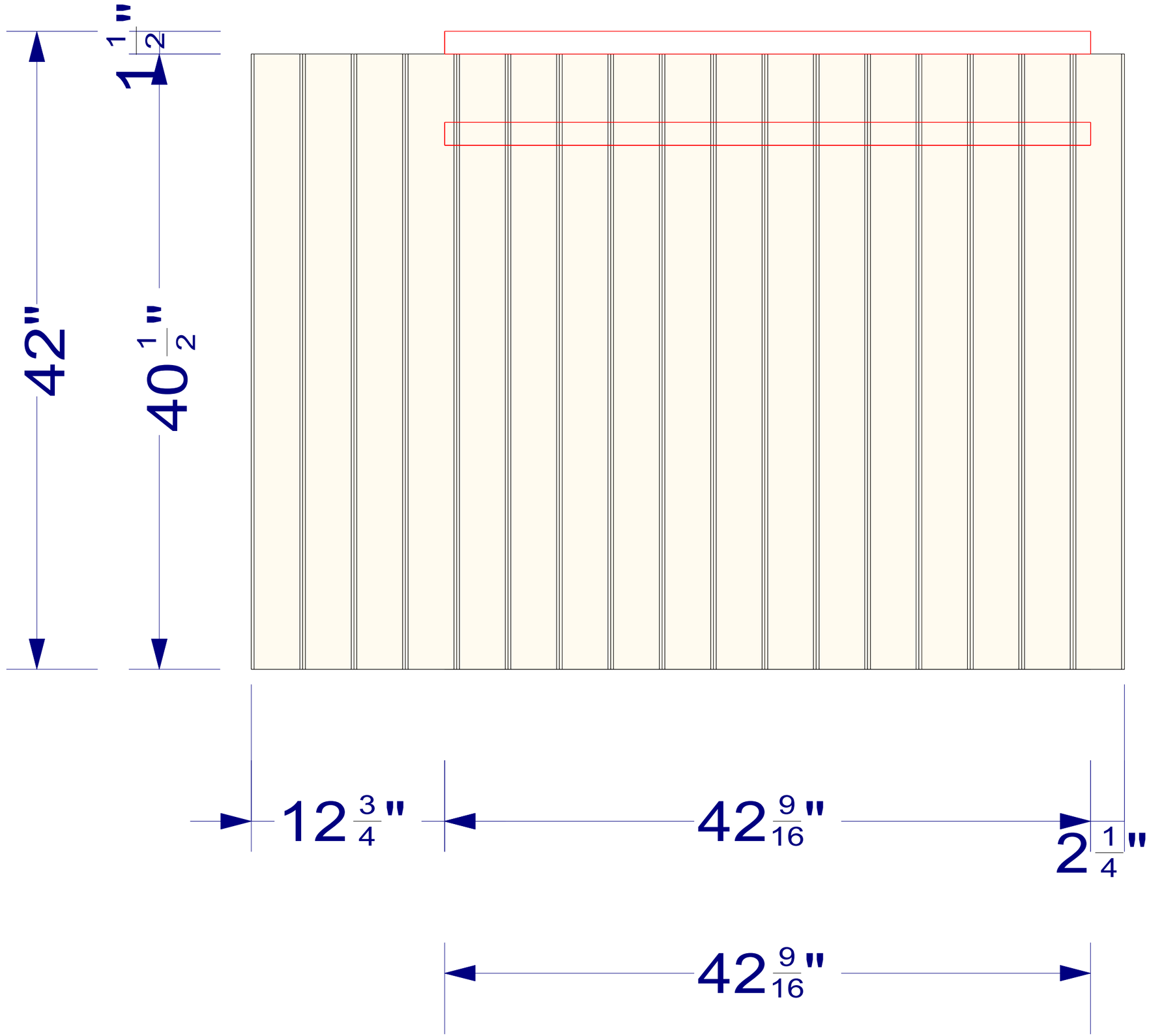
1 1/2"
42"
40 1/2"
12 3/4"
42 9/16"
2 1/4"
42 9/16"

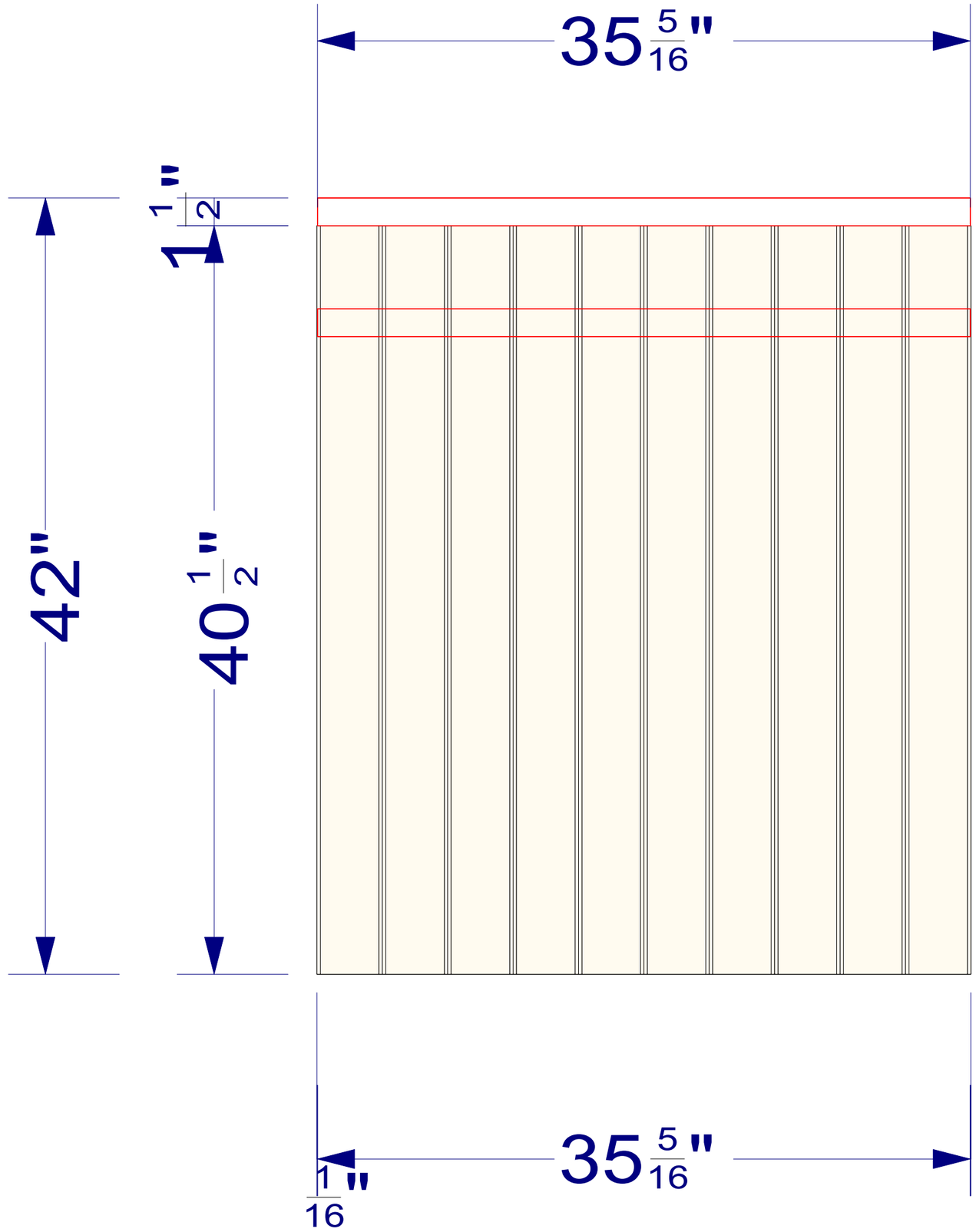
35 5/16"
1 1/2"
42"
40 1/2"
35 5/16"
1/16"