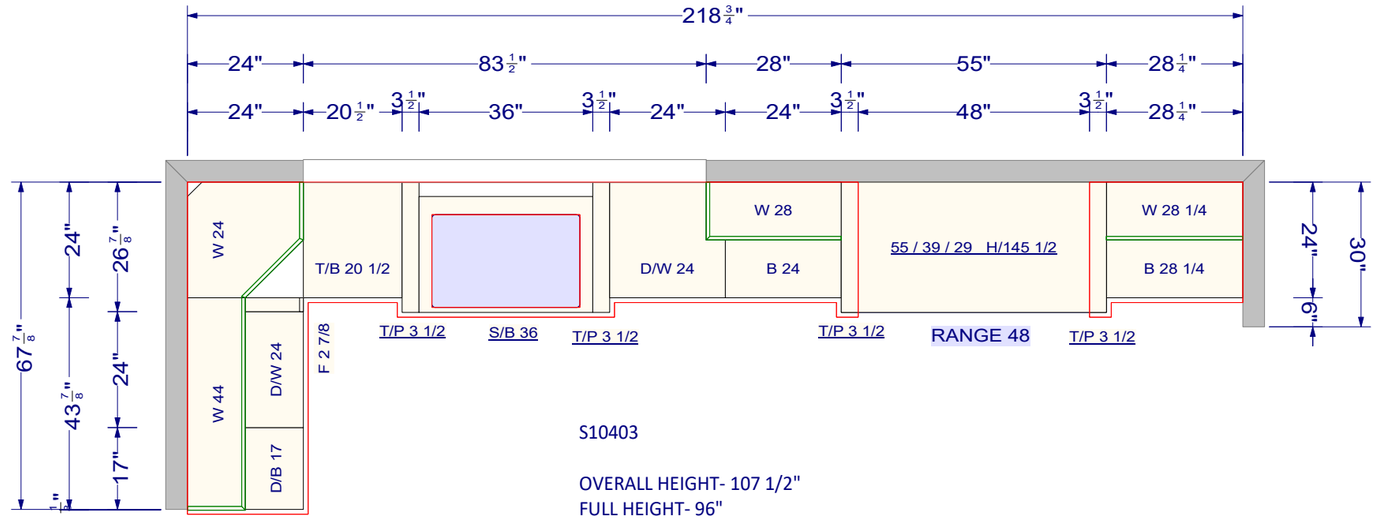

S10403

OVERALL HEIGHT- 107 1/2"
FULL HEIGHT- 96"
UPPER HEIGHT- 42"
UPPER DEPTH- 12 1/2"

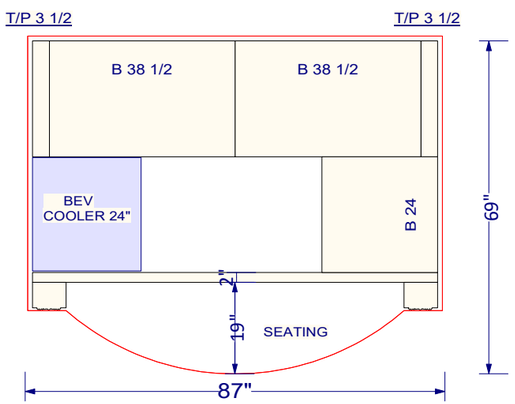

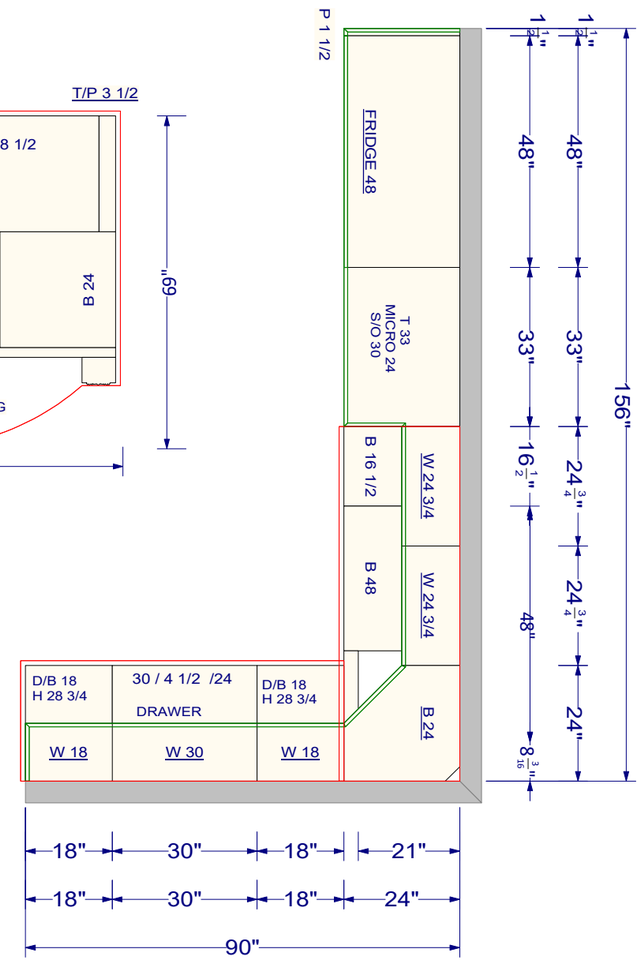

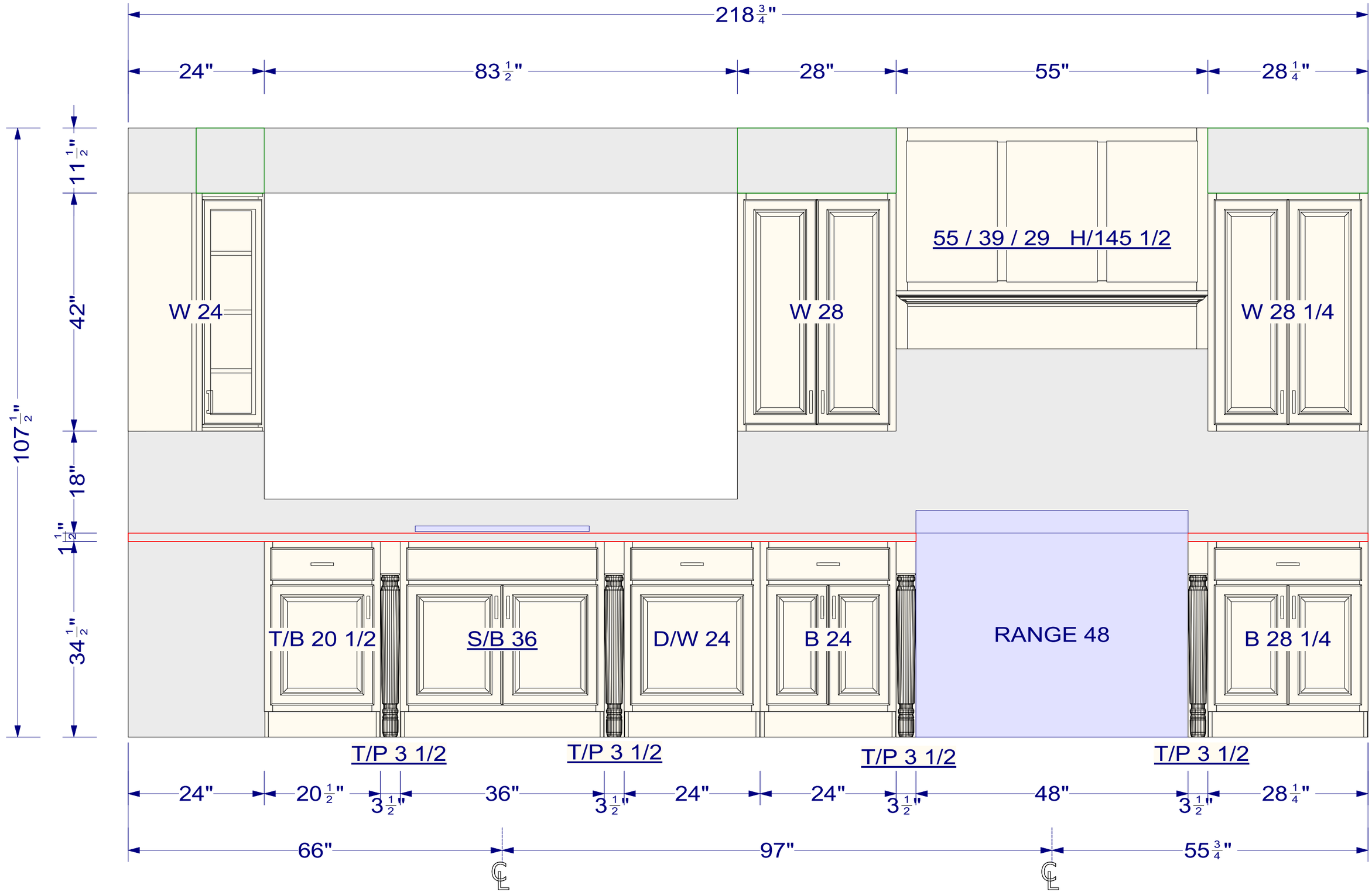
218 3/4"
24"
83 1/2"
28"
55"
28 1/4"
11 1/2"
42"
18"
1 1/2"
34 1/2"
107 1/2"
W 24
W 28
55 / 39 / 29 H/145 1/2
W 28 1/4
T/B 20 1/2
S/B 36
D/W 24
B 24
RANGE 48
B 28 1/4
T/P 3 1/2
T/P 3 1/2
T/P 3 1/2
T/P 3 1/2
24"
20 1/2"
3 1/2"
36"
3 1/2"
24"
24"
3 1/2"
48"
3 1/2"
28 1/4"
66"
97"
55 3/4"

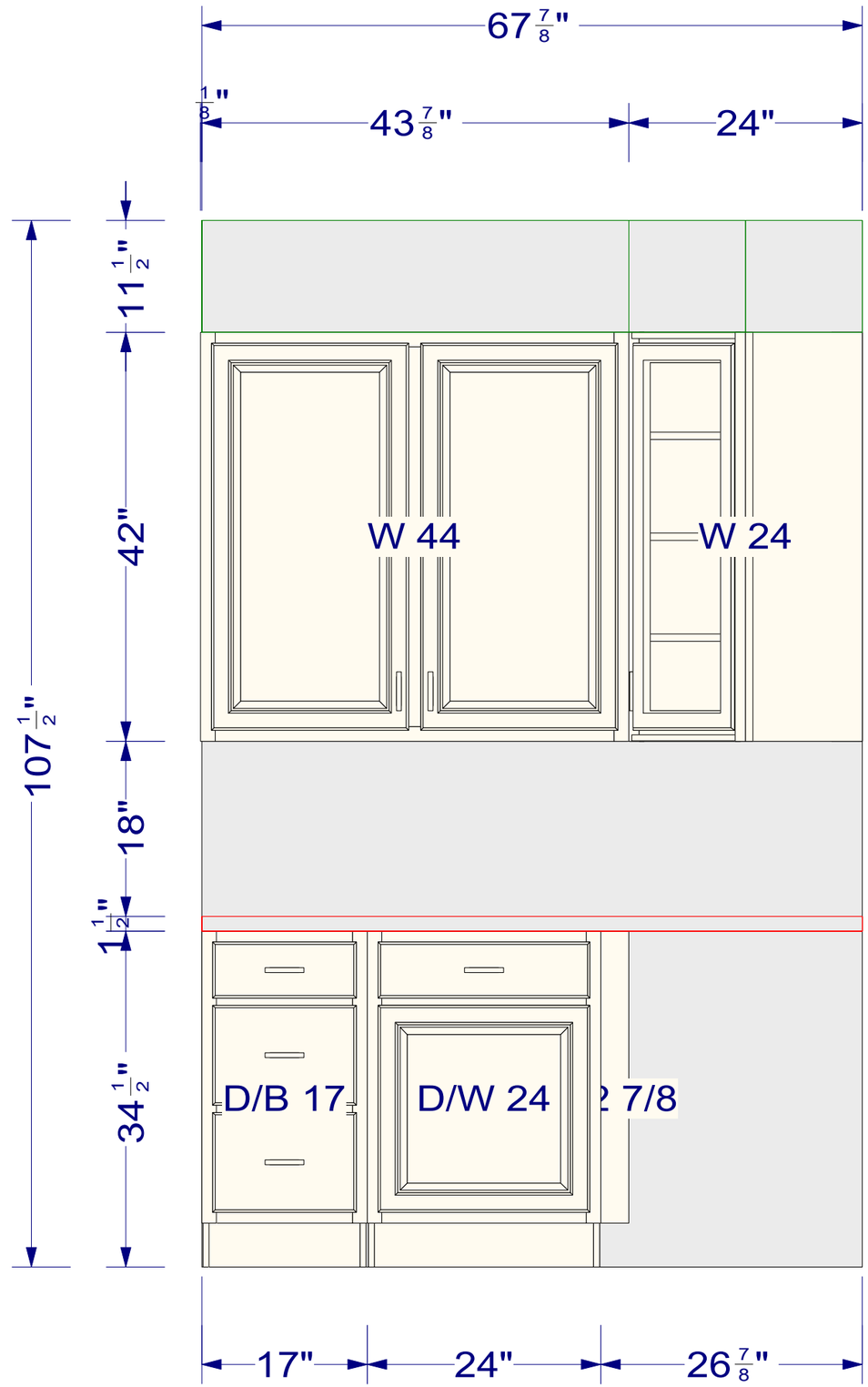
67 7/8"
1/8"
43 7/8"
24"
11 1/2"
42"
107 1/2"
18"
1 1/2"
34 1/2"
W 44
W 24
D/B 17
D/W 24
2 7/8
17"
24"
26 7/8"

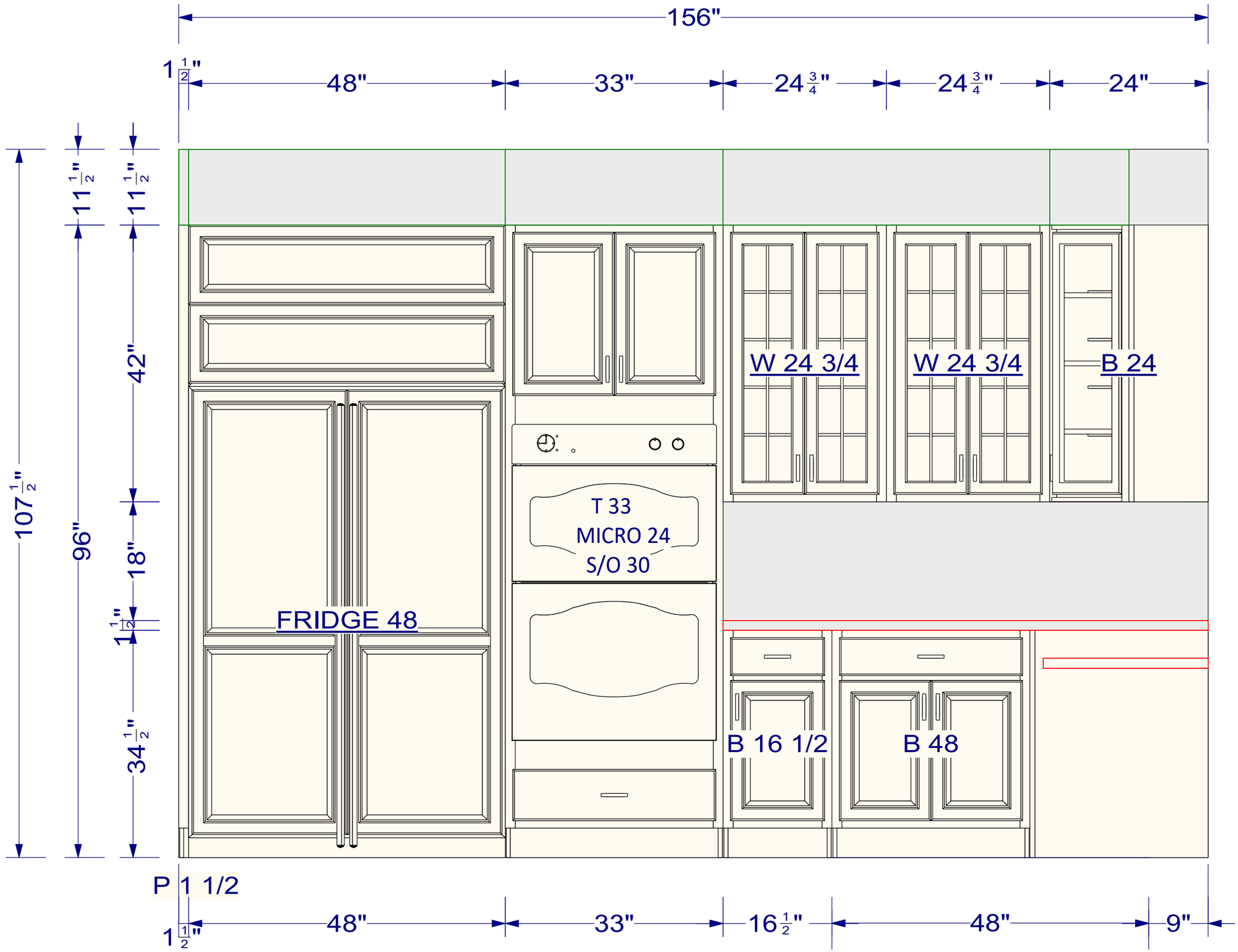
156"
1 1/2"
48"
33"
24 3/4"
24 3/4"
24"
11 1/2"
11 1/2"
42"
18"
1 1/2"
34 1/2"
107 1/2"
96"
W 24 3/4
W 24 3/4
B 24
T 33
MICRO 24
S/O 30
FRIDGE 48
B 16 1/2
B 48
P 1 1/2
1 1/2"
48"
33"
16 1/2"
48"
9"

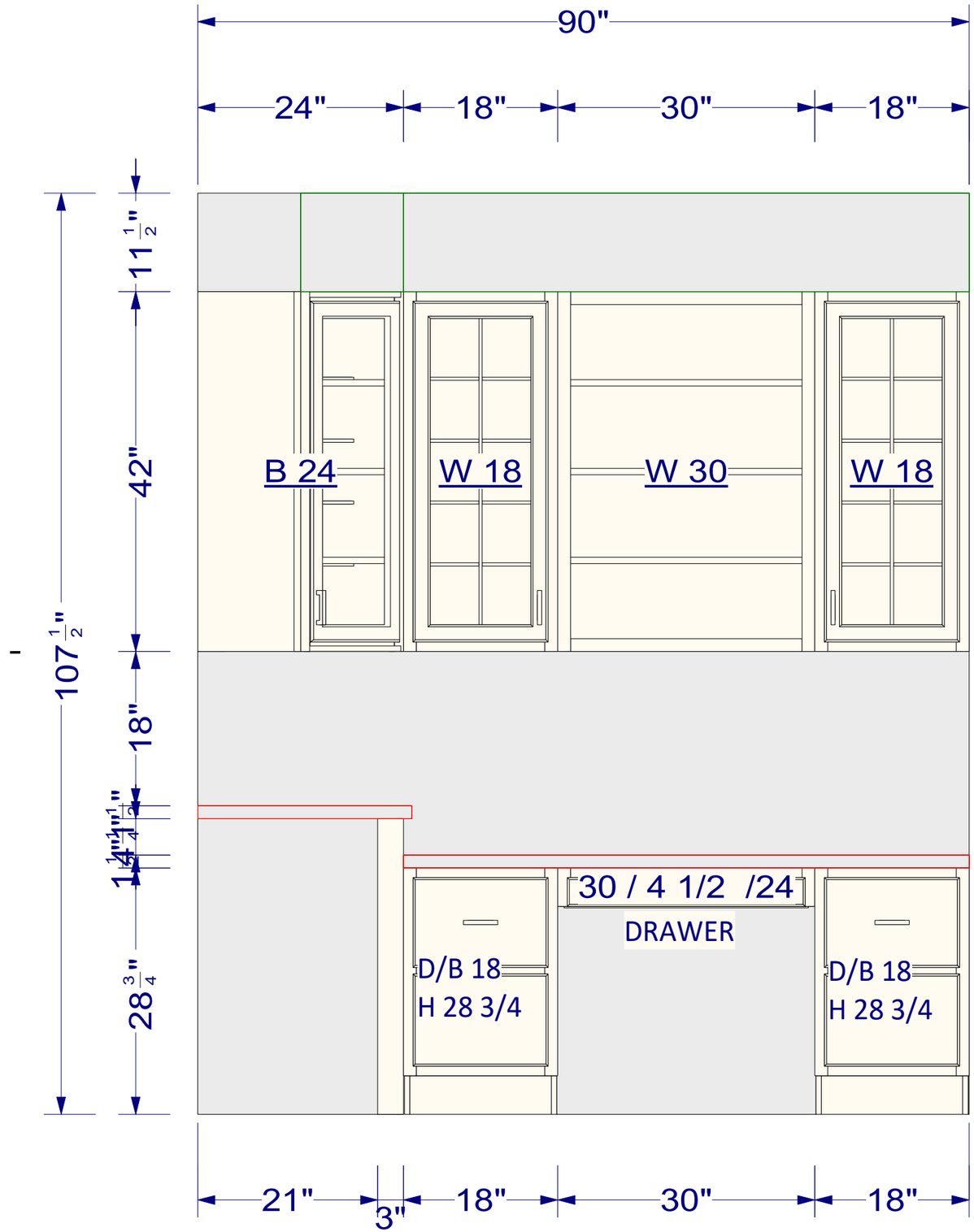
90"
24"
18"
30"
18"
11 1/2"
42"
18"
1 1/4"
1 1/4"
1 1/2"
28 3/4"
107 1/2"
B 24
W 18
W 30
W 18
30 / 4 1/2 /24
DRAWER
D/B 18
H 28 3/4
D/B 18
H 28 3/4
21"
3"
18"
30"
18"

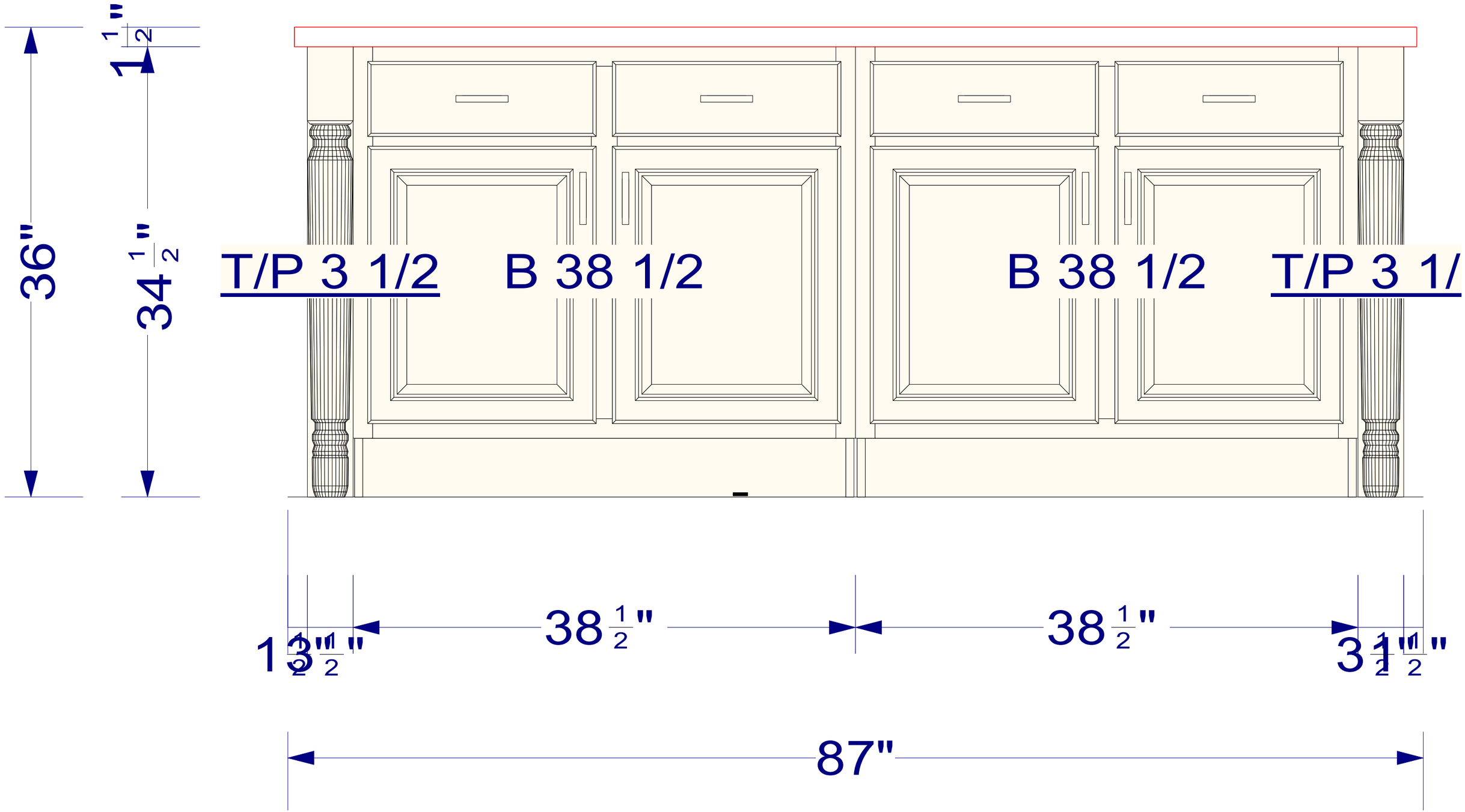
1 1/2"
36"
34 1/2"
T/P 3 1/2
B 38 1/2
B 38 1/2
T/P 3 1/
38 1/2"
38 1/2"
13 1/2"
13 1/2"
87"

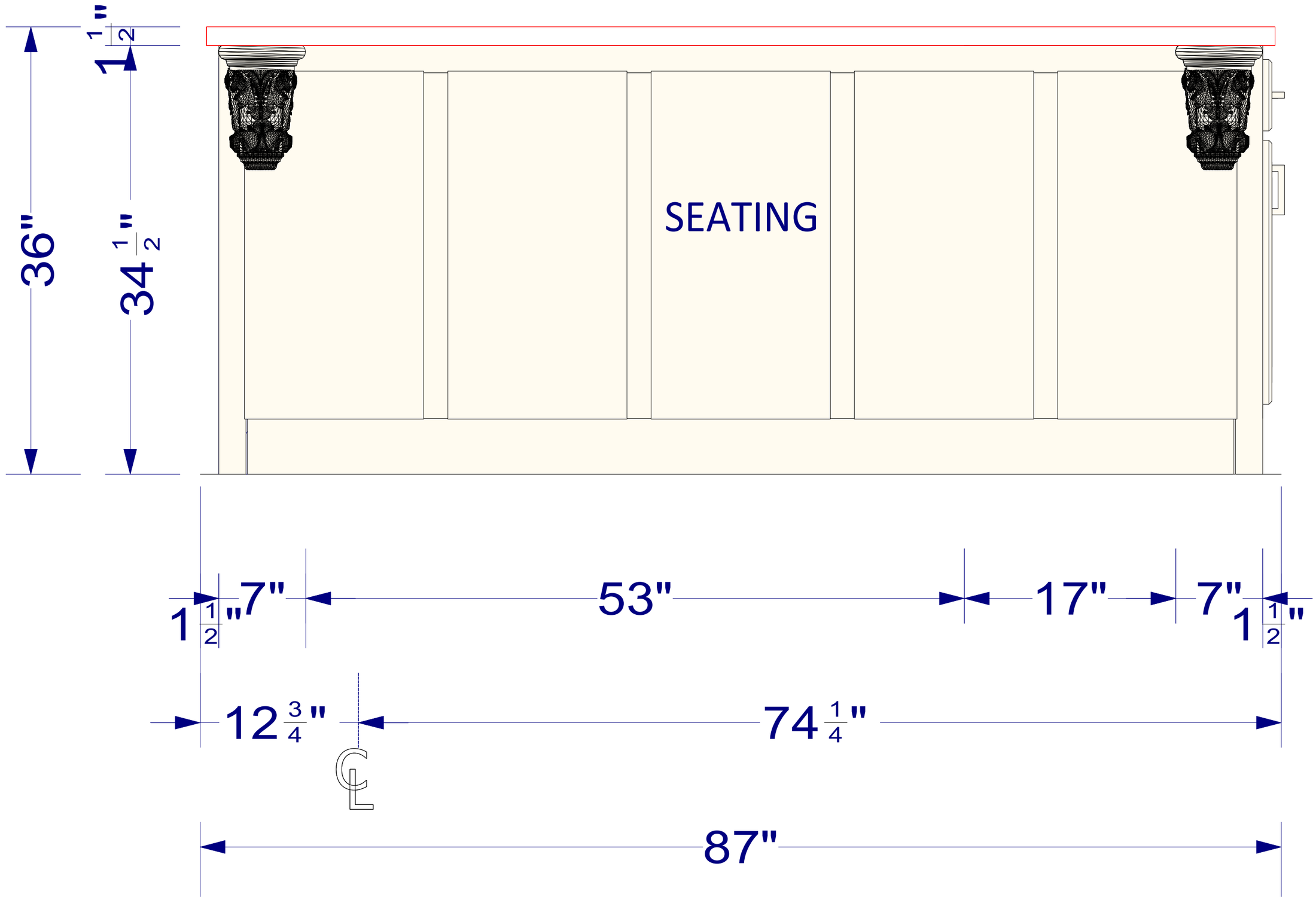
1 1/2"
36"
34 1/2"
SEATING
1 1/2"
7"
53"
17"
7"
1 1/2"
12 3/4"
74 1/4"
℄
87"

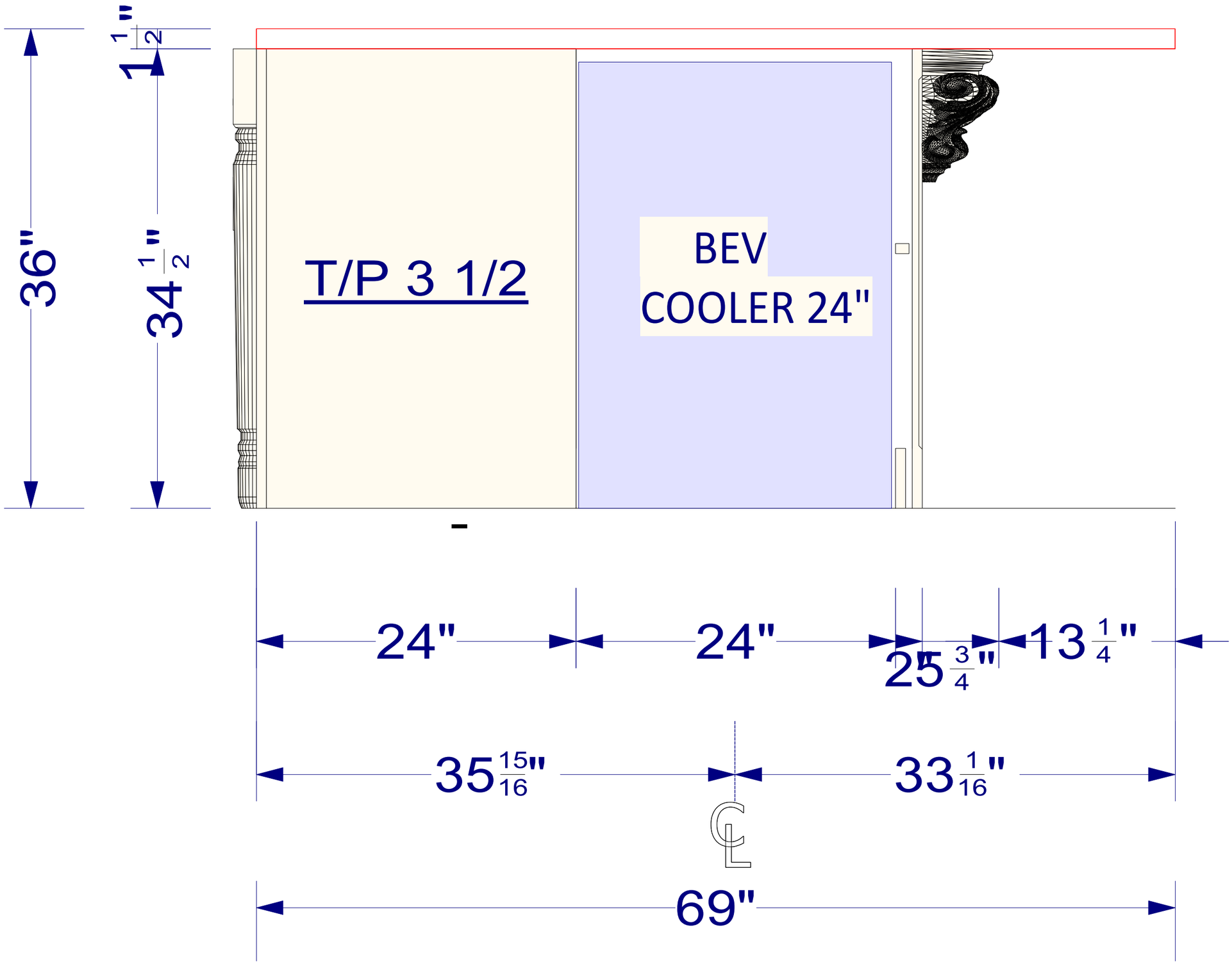
1 1/2"
36"
34 1/2"
T/P 3 1/2
BEV
COOLER 24"
24"
24"
25 3/4"
13 1/4"
35 15/16"
33 1/16"
69"

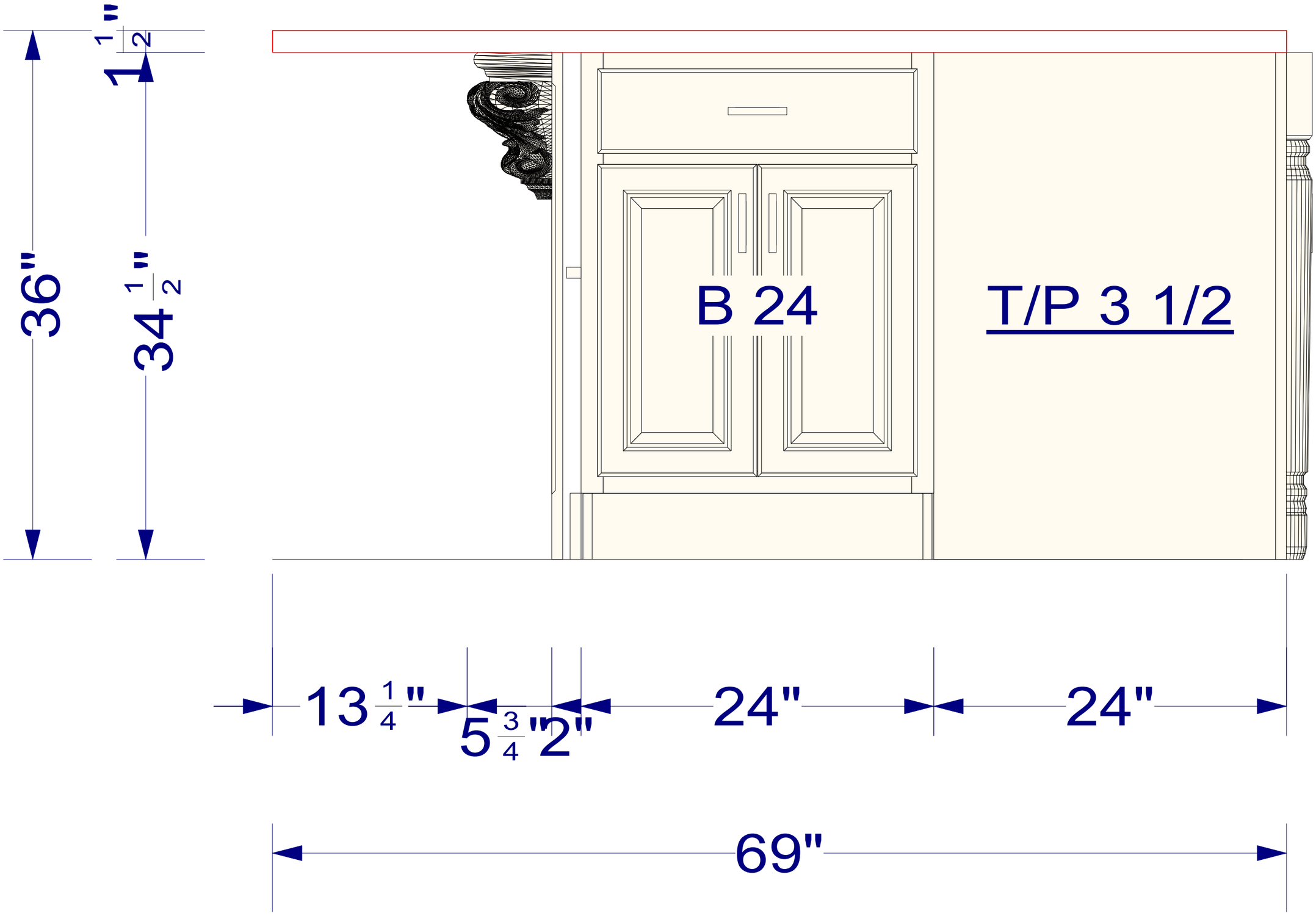
1 1/2"
36"
34 1/2"
B 24
T/P 3 1/2
13 1/4"
5 3/4"
2"
24"
24"
69"