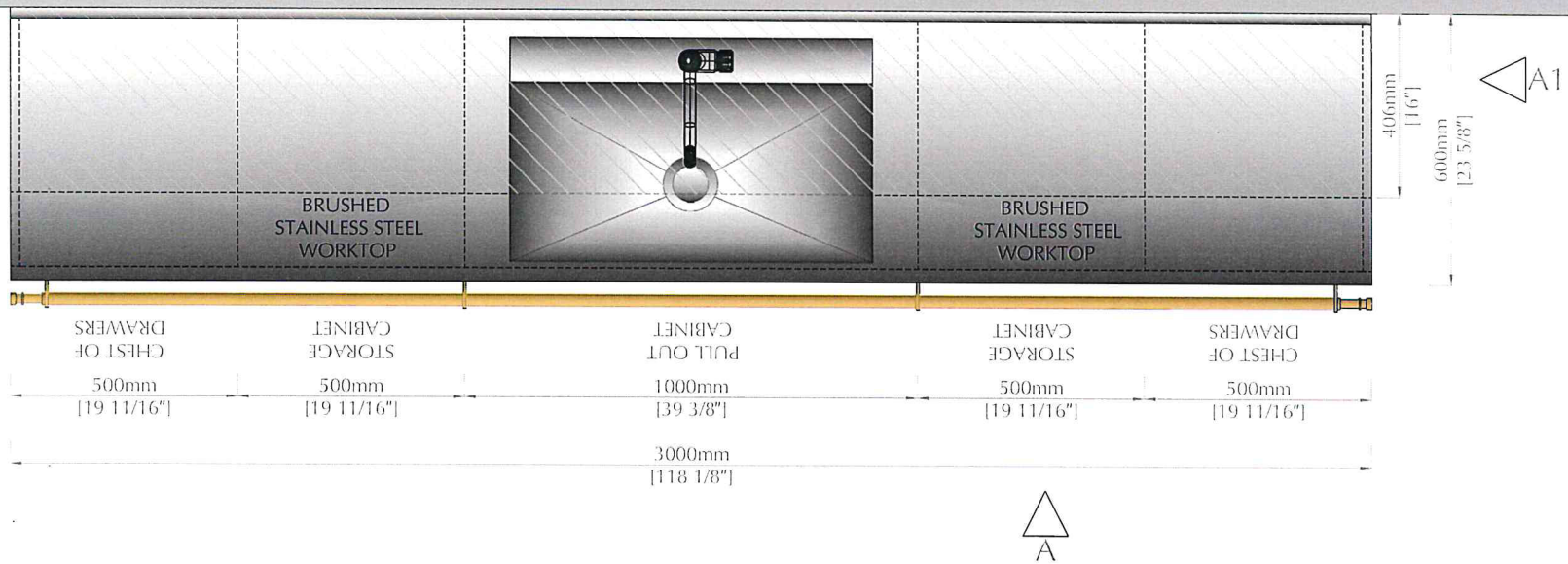
BRUSHED
STAINLESS STEEL
WORKTOP
BRUSHED
STAINLESS STEEL
WORKTOP
406mm
[16"]
600mm
[23 5/8"]
A1
CHEST OF
DRAWERS
STORAGE
CABINET
PULL OUT
CABINET
STORAGE
CABINET
CHEST OF
DRAWERS
500mm
[19 11/16"]
500mm
[19 11/16"]
1000mm
[39 3/8"]
500mm
[19 11/16"]
500mm
[19 11/16"]
3000mm
[118 1/8"]
A

720mm
[28 3/8"]
1560mm
[61 7/16"]
720mm
[28 3/8"]
INTERIOR LED LIGHTING
LED LIGHTING
INTERIOR LED LIGHTING
BRUSHED STAINLESS STEEL BACK PANEL
UNDER CABINET RECESSED LIGHTING STRIP
WALNUT HANDLES
BRUSHED STAINLESS STEEL BACKSPLASH
BRUSHED STAINLESS STEEL WORKTOP
920mm
[36 1/4"]
600mm
[23 5/8"]
2340mm
[92 1/16"]
913mm
[36"]
FINISHED FLOOR
CHEST OF DRAWERS
560mm
[19 11/16"]
STORAGE CABINET
500mm
[19 11/16"]
PULL OUT CABINET
1000mm
[39 3/8"]
STORAGE CABINET
500mm
[19 11/16"]
CHEST OF DRAWERS
500mm
[19 11/16"]
3000mm
[118 1/8"]
A
406mm
[16"]
920mm
[36 1/4"]
600mm
[23 5/8"]
20mm
[0 3/8"]
BRUSHED STAINLESS STEEL WORKTOP
30mm
[1 3/16"]
660mm
[26"]
2340mm
[92 1/16"]
913mm
[36"]
SIDE PANEL
600mm
[23 5/8"]
A1

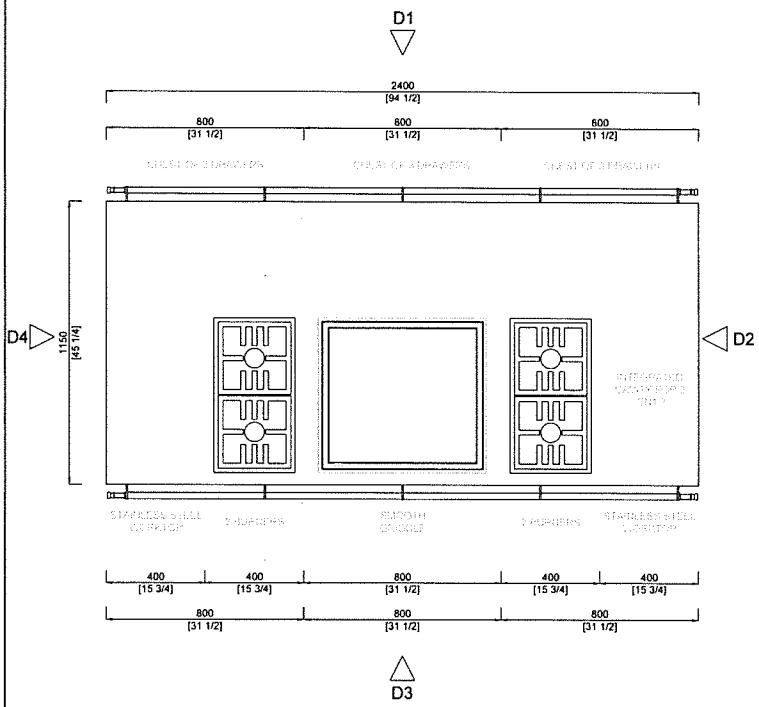

NORTH WINDOW PLAN

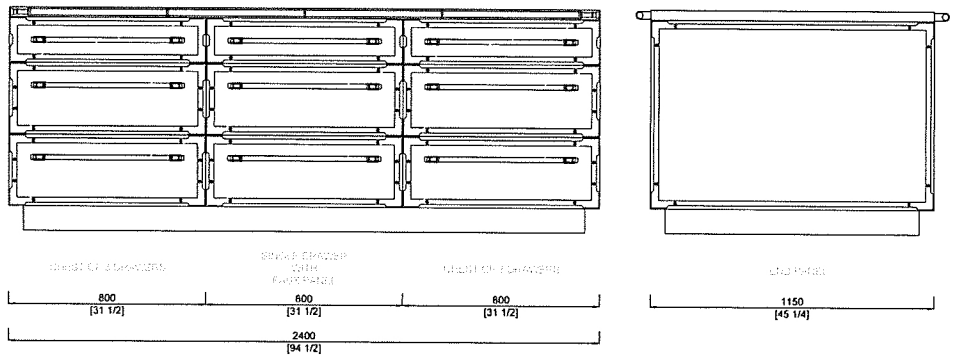

ELEVATION D3 & D4

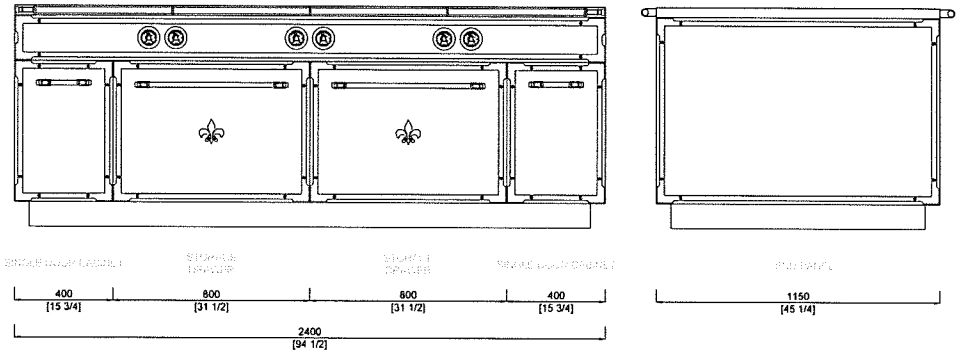

ELEVATION D1 & D2

SPECIFICATIONS:

1. TRIM: BURNISHED BRASS
2. METAL APPLIANCE PANEL: RAL 9005
3. COUNTERTOP: BRUSHED STAINLESS STEEL
4. HANDLES: BURNISHED BRASS

APPLIANCES L'ATELIER:

1. PROFESSIONAL RANGE: (1) L'ATELIER CUSTOM
   - (4) BURNERS
   - GROOVED GRIDDLE
   - (3) GN 1/3 TRAYS 325mm x 176mm